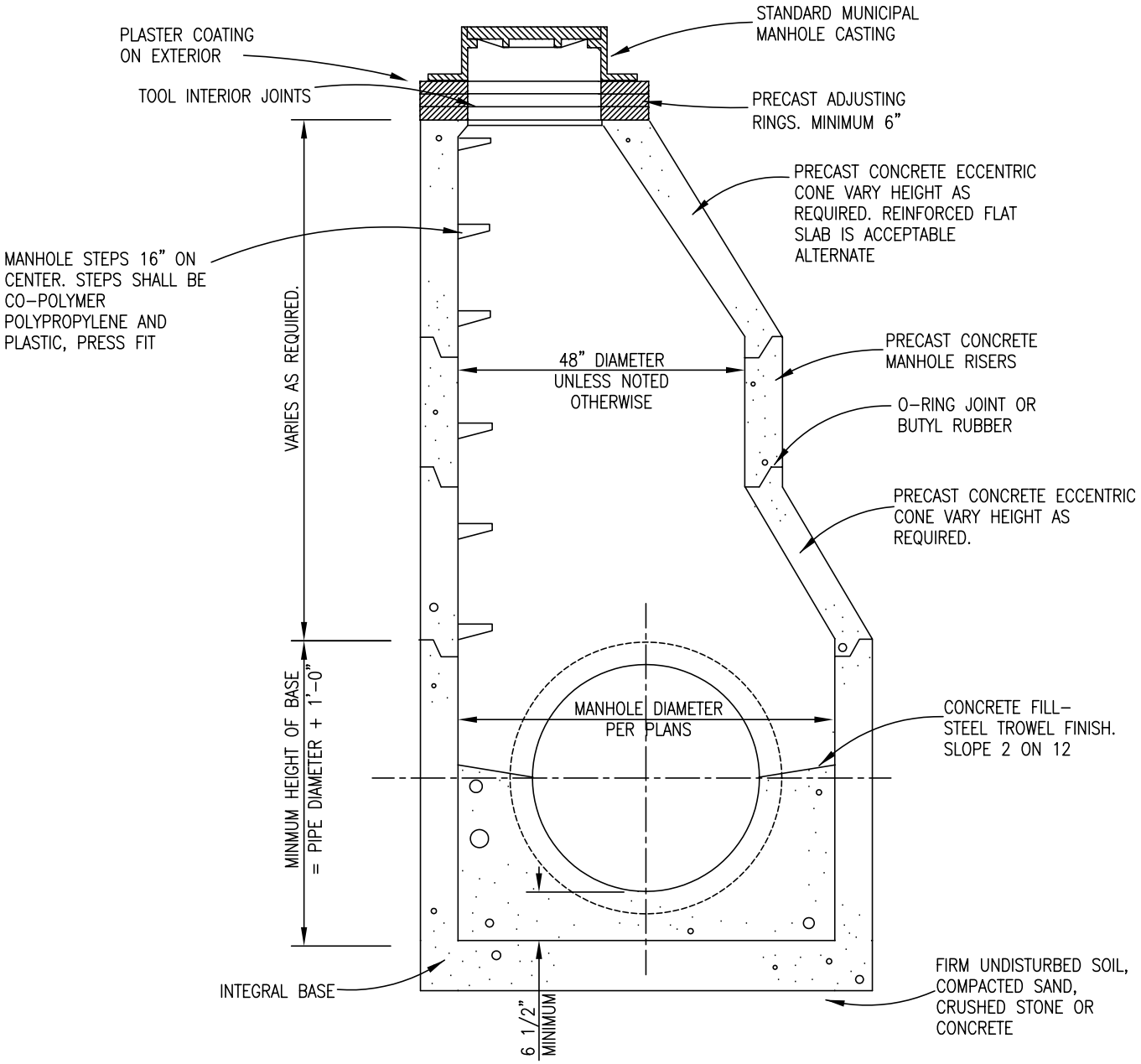

72" DIAMETER AND LARGER MANHOLE

NO SCALE

APPROVED DATE: 8-26-02
DETAIL: 403-10A